RNP0620

Nugget Ice Machine

RNP0620 Nugget Ice Machine

Model

☐ RNP0620A ☐ RNP0620W





RNP0620A Nugget Ice Machine on Multiplex SV-250 Dispenser

Model RNP0620A Nugget Ice Machine on D-420 Bin

Features

- Bite sized nugget with 85% ice content offers one of the best ice to water ratios for maximum cooling and minimal drink dilution
- Up to 633 lbs (287 kgs) of daily ice production
- Perfect for beverage applications, dispensing, smoothies, and cold therapy
- Can be paired with a Multiplex beverage dispenser for an unbeatable soft drink experience
- Highload maintanance free bearings for enhanced reliability
- R290 Refrigerant is environmentally friendly with less ozone depletion compared to R404



Specifications

BTU per hour:
Air: 10,822 (Average)
Water: 2,697 (Average)

Compressor:
Nominal rating: 1 HP

Refrigerant:
R290A

Operating Limits:

- Ambient Temperature Range: 50˚-110˚F (10˚-43˚C)
- Water Temperature Range: 37˚-90˚F (3˚-32˚C)
- Water Pressure Ice Maker
  Water In:
  Min. 14 psi (96.5 kPA)
  Max. 80 psi (551.1 kPA)

Ice Machine Electric

115/60/1 standard. (230/50/1 also available.)

Minimum circuit ampacity:

Air-Cooled: 13.5

Water-Cooled: 13.5

Maximum fuse size:

Air-Cooled: 20 amps

Water-Cooled: 20 amps

HACR-type circuit breakers can be used in place of fuses.

Ice Shape

Nugget ice consists of small pieces ranging from 3/8" to 1/2" in width and length on average. Offers a 85% ice to water ratio with a soft, chewable texture while still providing maximum cooling effect and great dispensibilty.



Ice shown actual size

NSF c UL US LISTED

ETL US CE

UL STD 563
CAN/CSA-C22.2 No. 120

AutoQuotes

2110 South 26th Street
Manitowoc, WI 54220

Tel: 1.920.682.0161
Fax: 1.920.683.7589

www.manitowocice.com

RNP0620 Nugget Ice Machine

RNP0620 on D-420 Storage Bin

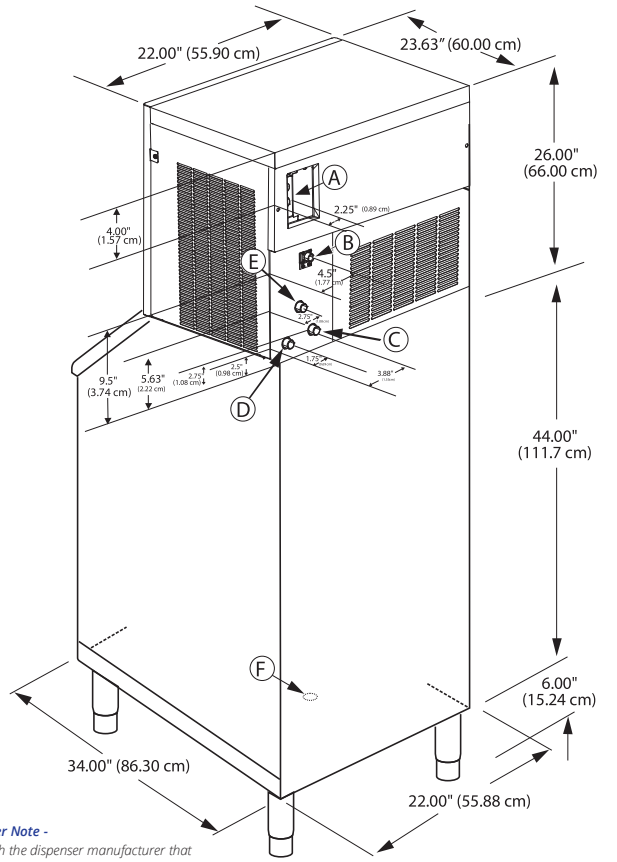

Dispenser Note -
Verify with the dispenser manufacturer that the correct agitator and deflector kit for nugget ice dispensing is included with your dispenser purchase.

Installation Note -
Minimum installation clearance:
Top/sides: 8" (20.32 cm),
Back: 5" (12.70 cm).

Ⓐ Electrical Entrance (2) Options
Ⓑ 3/8" F.P.T. Condenser Inlet (water-cooled only)
Ⓒ 1/2" M.P.T. Condenser Drain (water-cooled only)
Ⓓ 1/2" M.P.T. Ice Making Water Drain
Ⓔ 3/8" F.P.T. Ice Making Water Inlet
Ⓕ 3/4" Bin Drain

Space-Saving Designs



RNP0620 on D-420

Height	76.00" 193.00 cm
Width	22.00" 55.90 cm
Depth	34.00" 86.36 cm
Bin Storage	310 lbs 140.7 kg

Height includes adjustable bin legs 6.00" to 7.00", (15.24 to 17.78 cm) set at 6.00" (15.24 cm).

Accessories

K00472 30" D Style Bin Adapter

Air Flow Overhead View

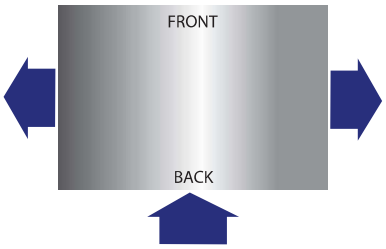

Air in back, out sides.

	Model	Ice Shape	Ice Production 24 Hours		Power kWh/100 lbs @ 90°Air/70°F	Water Usage (100 lbs./45.4 kgs of Ice)	
			70° Air/50°F Water 21° Air/10° C Water	90° Air/70°F Water 32° Air/21° C Water		Potable Water	Condenser Water
			Standard	Standard			
AIR-COOLED	RNP0620A	Nugget	591 lbs	451 lbs	6.36	12 gal	—
			268 kg	204 kg		45.4 L	—
WATER-COOLED	RNP0620W	Nugget	633 lbs	545 lbs	4.19	12 gal	153 gal
			287 kg	247 kg		45.4 L	579 L

Manitowoc Ice reserves the right to make changes to the design or specifications without prior notice.

2110 South 26th Street
Manitowoc, WI 54220

Tel: 1.920.682.0161
Fax: 1.920.683.7589

www.manitowocice.com

6515D 06/22