Outperform every day.™

Project:

Item Number:

Quantity:

VACUUM PACK MACHINE WITH 12" SEALING BAR



ITEMS

Item No.	Model No.	Description
40831	VP12	Vacuum Pack Machine with 12" Sealing Bar

FEATURES

- Busch rotary vacuum pump
- Stainless steel exterior
- Deep drawn stainless steel vacuum chamber with round corners
- Transparent, soft-open lid for monitoring functions
- Double seals for extra secure bags
- Accommodates bags up to 12" (30.5 cm) wide
- Sealing bar easily removes without tools for cleaning and maintenance
- Includes two insert plates for packing small products
- Maximum vacuum is 99.3% (3 m bar)
- Set vacuum by sensor control (% pressure)
- Vacuum Plus enables air trapped withing the food to escape
- User definable sealing time, up to 6 seconds
- Slow chamber decompression enables the bag to gently form to the product
- Pump Conditioning program removes moisture and debris from pump
- Two sealing cylinders provide optimal pressure to create high-quality seals
- Pump conditioning and oil change maintenance reminders
- Includes maintenance kit with oil, lid gasket, silicone bar, Teflon® tape and sealing wire
- 6 ft. (182. 9 cm) cord with plug

DESCRIPTION

Vollrath's vacuum pack machines extend the life of fresh and frozen foods and are ideal for vacuum packing for sous vide cooking.

The Vollrath Vacuum Pack Machine with 12" Sealing Bar provides high-quality vacuum packing in a small footprint tabletop machine. The easy to use control panel enables users to set the vacuum time and seal time. Packing cycle begins when the lid is closed and ends when the lid automatically opens.

Note, this machine is not designed for continuous use. Allow a 15 second rest between packing cycles for best performance. Intended for a maximum use of five hours per day.

WARRANTY

All models shown come with Vollrath's standard warranty against defects in materials and workmanship. One year on the pump and two years on other warranty parts. For full warranty details, please refer to www.Vollrath.com.

CLEARANCE AND ENVIRONMENT REQUIREMENTS

Requires 6" (15 cm) clearance on all sides and 15½" (39.4 cm) above the machine.

Agency Listings

Intertek Intertek

Due to continued product improvement, please consult www.vollrath.com for current product specifications.

Approvals	Date

Vacuum Pack Machine with 12" Sealing Bar

The Vollrath Company, L.L.C.

Outperform every day.™

www.vollrath.com

The Vollrath Company, L.L.C.
1236 North 18th Street
Sheboygan, WI 53081-3201 U.S.A.
Main Tel: 800.624.2051 or 920.457.4851
Main Fax: 800.752.5620 or 920.459.6573
Customer Service: 800.628.0830
Canada Customer Service: 800.695.8560

Technical Services
techservicereps@vollrathco.com
Induction Products: 800.825.6036
Countertop Warming Products: 800.354.1970
All Other Products: 800.628.0832

VACUUM PACK MACHINE WITH 12" SEALING BAR

DIMENSIONS (Shown in inches (cm))

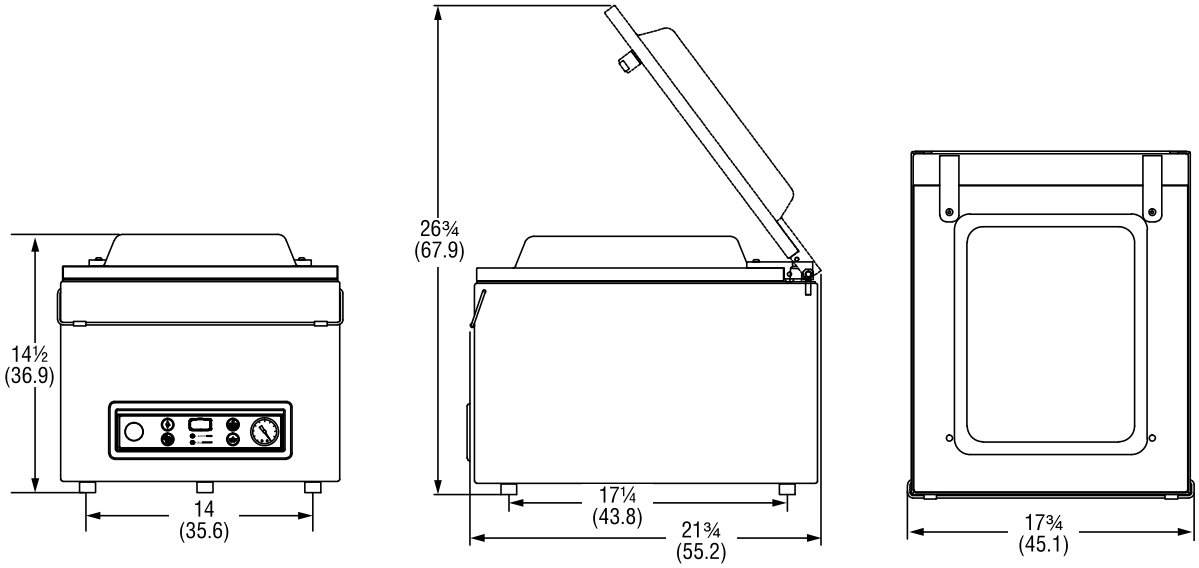

Front View | Side View | Top View

SPECIFICATIONS

Item No.	Dimensions IN (CM) Chamber (W x D x H)	Maximum Product Height	Volts	Amps	Hz	Pump Capacity GPM (m3/hr)	HP	Plug	Weight LB (KG)
40831	14½ x 17 x 4 (36.8 x 43.2 x 10.2)	6 (15.2)	120	8.5	60	36.7 (10)	0.64	NEMA 5-15P	77.2 (35)

Receptacle

120V



NEMA 5-15R

The Vollrath Company, L.L.C.
1236 North 18th Street
Sheboygan, WI 53081-3201 U.S.A.
Main Tel: 800.624.2051 or 920.457.4851
Main Fax: 800.752.5620 or 920.459.6573
Customer Service: 800.628.0830
Canada Customer Service: 800.695.8560

Technical Services
techservicereps@vollrathco.com
Induction Products: 800.825.6036
Countertop Warming Products: 800.354.1970
All Other Products: 800.628.0832

VOLLRATH®
Outperform every day.™
www.vollrath.com

© 2018 The Vollrath Company L.L.C.
Form Number L36016 12/12/18
Printed in USA

The Vollrath Company, L.L.C.