WSC300

XPress™ Multipurpose Cooktop

COOK



MAIN FEATURES

- Quickly and easily cook sweet or savory crêpes, quesadillas, tortillas, omelets, cheese crisps and more
- 13.5-inch multipurpose, aluminum cooking surface with embedded heating elements for fast heat-up and recovery time
- Dual cooking surfaces cook both sides at once, cutting cook time and eliminating the need to flip foods
- Cooking surface is triple coated with Whitford QuanTanium®* non-stick coating for easy removal of foods
- Electronic touchpad with precise temperature controls from 125°F–425°F (52°C–218°C)
- View temperature in Fahrenheit or Celsius
- Programmable countdown digital timer with audible beep indicators
- Includes silicone crêpe spatula to fold crêpes and easily remove foods without scratching nonstick surface
- Limited Two-Year Warranty

*QuanTanium® is a registered trademark of the Whitford Corporation

ELECTRICAL

Voltage: 120V

Frequency: 60Hz

Watts: 1800

Plug Type: NEMA 5-15P

Cord Length: 3 feet

SALES FEATURES

Crêpe making, simplified and perfected. The XPress™ cooks both sides simultaneously to produce flawlessly formed crêpes, minimizing prep time and maximizing output. Designed to also warm and cook tortillas, make quesadillas, and more, this dual-surface cooktop with digital controls is ideal for today's busy foodservice operations. Just set time and temperature for perfect results, every time.

@waringcommercial

©2023 Waring Commercial

314 Ella T. Grasso Avenue, Torrington, CT 06790
Tel. 800-492-7464 • Fax 860-496-9008

waringcommercialproducts.com

XPress™ Multipurpose Cooktop
WSC300

PARTS & ACCESSORIES



CAC173 Silicone Crêpe Spatula

DIMENSIONS

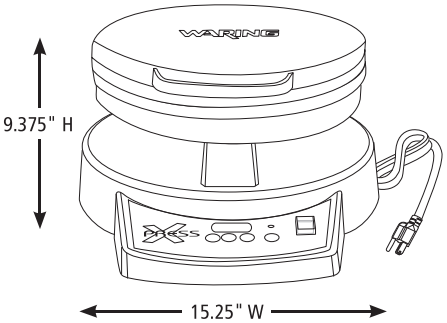

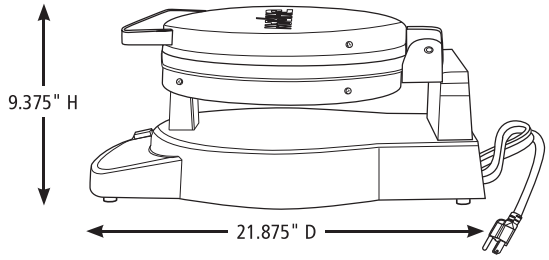

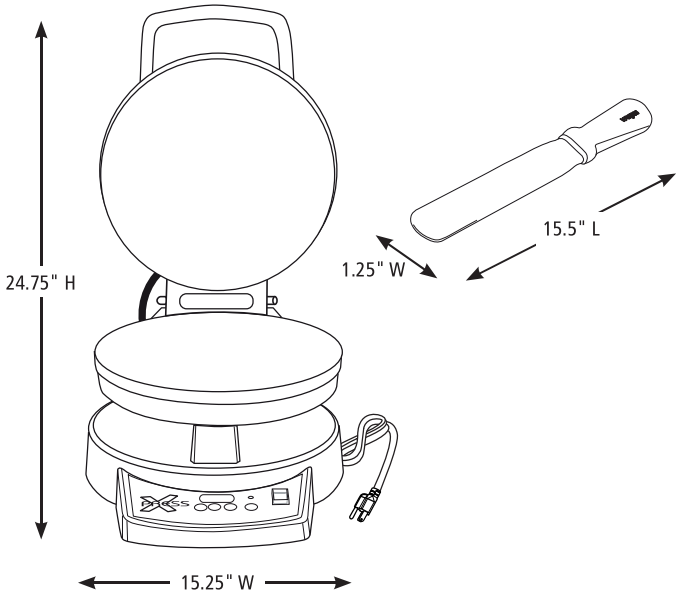

Out of Box Weight: 26.5 lb.

ORDERING INFORMATION	#STD. PKG.	GIFTBOX WEIGHT	CUBIC FEET	BOX DIMENSIONS D x W x H	UPC	CASE PKG.	MC WEIGHT	MC DIMENSIONS D x W x H	MBC
WSC300 – XPress™ Multipurpose Cooktop	1	27.2 lb.	2.47	23.26" x 17.55" x 11.57"	040072084799	1	30.3 lb.	23.85" x 18.14" x 12.36"	10040072084796

@waringcommercial

©2023 Waring Commercial
314 Ella T. Grasso Avenue, Torrington, CT 06790
Tel. 800-492-7464 • Fax 860-496-9008

waringcommercialproducts.com

23WC086796 / REV 06/23