Project:

Item Number:

Quantity:

VACUUM PACK MACHINE WITH DUAL 16" SEALING BARS



ITEMS

Item No.	Model No.	Description
40833	VP16	Vacuum Pack Machine with Dual 16" Sealing Bars

DESCRIPTION

The Vollrath Vacuum Pack Machine with Dual 16" Sealing Bars provides versatile, high-quality vacuum packing in a small footprint tabletop machine. Liquid Sensor Control helps ensure moist or liquid products can be packed without degrading the product or damaging the machine. Additional features such as Vacuum Plus and Soft-Air enable the user to adjust performance to pack a wide variety of products.

Preset programs can be customized for simple operation and consistent outcomes.

Packing cycle begins when the lid is closed and ends when the lid automatically opens.

Note, this machine is not designed for continuous use. Allow a 15-second rest between packing cycles for best performance. Intended for a maximum use of five hours per day.

FEATURES

- Busch rotary vacuum pump
- Stainless steel exterior
- Deep drawn stainless steel vacuum chamber with round corners
- Transparent, soft-open lid for monitoring functions
- Dual sealing bars accommodate multiple bags up to 16" (40.6 cm) wide
- Double seals for extra secure bags
- Sealing bars easily remove without tools for cleaning and maintenance
- Includes three insert plates for packing small products
- Includes incline plate for packing liquids and fine powders
- Maximum vacuum is 99.8% (2 m bar)
- Set vacuum function by time or sensor control (% pressure)
- Ten programs include Liquid Control, Soft-Air and Vacuum Plus functions
- Soft-Air reduces damage to delicate foods or the bag
- Liquid Control detects the boiling point, stops the vacuum and advances to the next step to reduce cycle time, produce a better quality product and save the pump from taking on liquids
- Vacuum Plus enables air trapped within a product to escape
- Pump Conditioning program removes moisture and debris from pump
- Two sealing cylinders provide optimal pressure to deliver high-quality seals
- Pump conditioning and oil change maintenance reminders
- Included 4" (10.2 cm) legs required for ETL Sanitation
- Includes maintenance kit with oil, lid gasket, silicone bar, Teflon® tape and sealing wire
- 6 ft. (182. 9 cm) cord with plug

WARRANTY

All models shown come with Vollrath's standard warranty against defects in materials and workmanship. One year on the pump and two years on other warranty parts. For full warranty details, please refer to www.Vollrath.com.

CLEARANCE AND ENVIRONMENT REQUIREMENTS

Requires 6" (15 cm) clearance on all sides and 15½" (39.4 cm) above the machine.

Agency Listings

Intertek Intertek

Due to continued product improvement, please consult www.vollrath.com for current product specifications.

Approvals	Date

Vacuum Pack Machine with Dual 16" Sealing Bars

The Vollrath Company, L.L.C.

Outperform every day.™

www.vollrath.com

The Vollrath Company, L.L.C.
1236 North 18th Street
Sheboygan, WI 53081-3201 U.S.A.
Main Tel: 800.624.2051 or 920.457.4851
Main Fax: 800.752.5620 or 920.459.6573
Customer Service: 800.628.0830
Canada Customer Service: 800.695.8560

Technical Services
techservicereps@vollrathco.com
Induction Products: 800.825.6036
Countertop Warming Products: 800.354.1970
All Other Products: 800.628.0832

VACUUM PACK MACHINE WITH DUAL 16" SEALING BARS

DIMENSIONS (Shown in inches (cm))

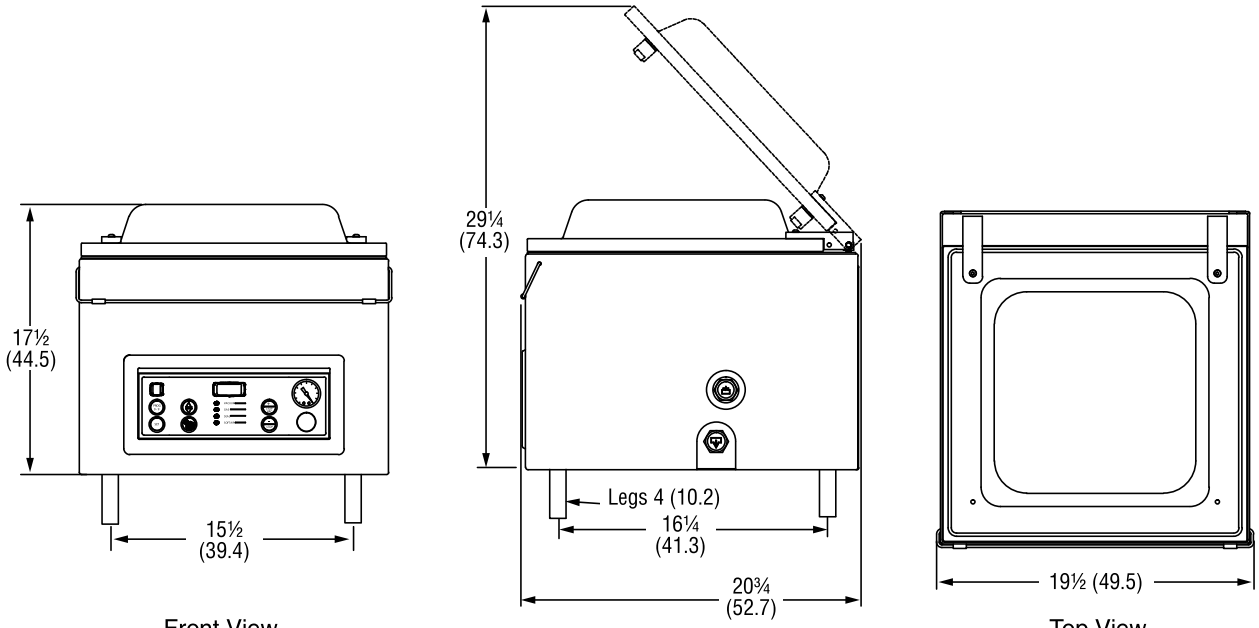

Front View

Side View

Top View

SPECIFICATIONS

Item No.	Dimensions IN (CM) Chamber (W x D x H)	Dimensions IN (CM) Maximum Product Height	Volts	Amps	Hz	Pump Capacity GPM (m3/hr)	HP	Plug	Weight LB (KG)
40833	16 13/16 x 16½ x 5 (42.7 x 41.9 x 12.7)	7½ (19.1)	120	13	60	92 (25)	1.3	NEMA 5-20P	136.7 (62)

Receptacle

120V



NEMA 5-20R

The Vollrath Company, L.L.C.

VOLLRATH®

Outperform every day.™

www.vollrath.com

The Vollrath Company, L.L.C.
1236 North 18th Street
Sheboygan, WI 53081-3201 U.S.A.
Main Tel: 800.624.2051 or 920.457.4851
Main Fax: 800.752.5620 or 920.459.6573
Customer Service: 800.628.0830
Canada Customer Service: 800.695.8560

Technical Services
techservicereps@vollrathco.com
Induction Products: 800.825.6036
Countertop Warming Products: 800.354.1970
All Other Products: 800.628.0832

© 2018 The Vollrath Company L.L.C.

Form Number L36017 12/12/18
Printed in USA