BEVERAGE-AIR

PROJECT: _____

ITEM # _____ QTY: _____

MODEL # _____

AIA # _____ SIS # _____

APPROVED: _____

CHEF BASE REFRIGERATOR

CHEF BASE REFRIGERATOR

Model: WTRCS52HC

TWO DRAWERS



7 YEAR WARRANTY

Parts, Labor, and Compressor

CABINET CONSTRUCTION

- Stainless steel front, sides, drawers and grille (galvanized back & bottom)
- Interior liner is made of corrosion resistant aluminum
- Top has full marine edge to prevent spills from dripping over sides
- Full electronic control
- Top weight capacity 1000 lbs
- One-piece, snap-in magnetic drawer gasket
- 12-Gauge stainless steel drawer slides with Delrin® rollers rated at 275 lbs
- Lifetime warranty on all drawers and slides
- Heavy duty, fire-proof, insulated 16 gauge top
- No heat shield required (must adhere to proper clearance per owners manual)
- Accommodates 6" deep full size food service pans (not included)
- Self-closing drawer feature
- Compressor standard on right side
- 3" Casters, 2 with brakes standard

OPTIONS & ACCESSORIES

- Left side compressor location (-ALT) (specify at time of unit order)
- Stainless steel back
- Stainless steel interior
- Additional pan supports
- 6" Adjustable legs, 6" seismic legs
- 6" Casters
- Gasket guards
- Flat top overhang (up to 6" overhang on each side)
- Remote option*(refrigerant must be specified at time of order, see note on back on page)

REFRIGERATION SYSTEM

- Uses environmentally friendly, energy efficient R290 refrigerant, and meets all regulatory requirements for CARB, SNAP, DOE & more
- Adaptive defrost
- Non-electric defrost with hot gas condensate evaporation
- Refrigerator capable of maintaining product temperature 36°F to 38°F

3779 Champion Blvd., Winston-Salem, NC 27105
888-845-9800 Fax: 336-245-6453
Beverage-Air.com Sales@bevair.com

Please verify qualifying units by visiting:
www.energystar.gov/cfs

Specifications are subject to change without prior notice.

Date Issued 9/25 Printed in U.S.A.

CHEF BASE REFRIGERATOR

BEVERAGE-AIR

Chef Base Refrigerator
Model: WTRCS52HC

PLAN VIEW

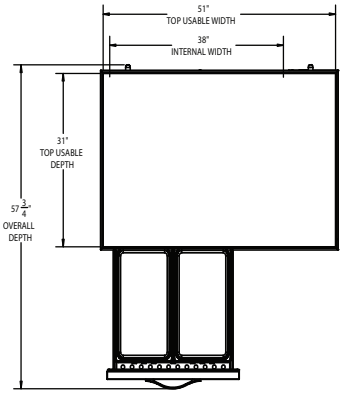

ELEVATION VIEW

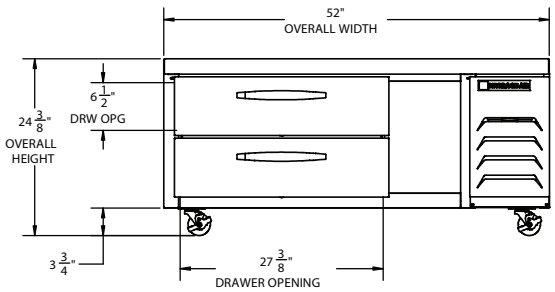

SIDE VIEW

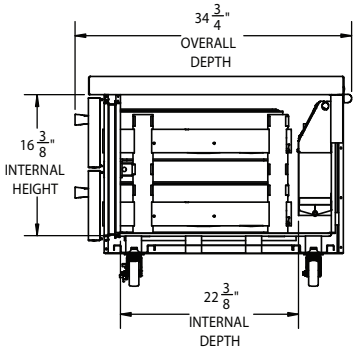

EXTERNAL DIMENSIONAL DATA	
Width Overall (in)	52”
Depth Overall (in)	34 3/4”
Height Overall (in)	24 3/8”
Number of Drawers	2
Depth with Drawers Extended (in)	57 3/4”
Drawer Openings (in)	(2) 27 3/8” X 6 1/2”
INTERNAL DIMENSIONAL DATA	
NET Capacity (cubic ft).	8.06
Internal Width Useable (in)	38”
Internal Depth Overall (in)	22 3/8”
Internal Height Overall (in)	16 3/8”

*NOTE: Remote units are field wired and come with 6” legs.
Refrigerant must be specified at time of order.

We reserve the right to change specifications and product design without notice. Such revisions do not entitle the buyer to corresponding changes, improvements, additions or replacements for previously purchased equipment. Dimensional tolerances +/- 1/4”. Metric dimensions (MM).

Required Clearance: Bottom 3 13/16” & Rear 1”

ELECTRICAL DATA	
Full Load Amps	3.3
Voltage	115/60/1
Nema Plug (8’ cord)	5-15P
REFRIGERATION DATA	
Horsepower	1/3
Capacity (BTU/Hr)	1942
Heat Rejection (BTU/Hr)	2913
Charge (lbs/grams/ounces)	0.287 / 130 / 4.59
SHIPPING DATA	
Gross Weight - Crated	400 lbs.
Height - Crated (in)	27”
Width - Crated (in)	58”
Depth - Crated (in)	38”

ELECTRICAL CONNECTION



115/60/1
NEMA 5-15P

Unit pre-wired at factory and include 8’ long cord and plug set.

3779 Champion Blvd., Winston-Salem, NC 27105 | 888-845-9800 | Fax: 336-245-6453 | Beverage-Air.com | Sales@bevair.com

Date Issued 9/25 | Printed in U.S.A.

WELBILT
an AJI Group Company