KRATOS

SERVICE, INSTALLATION AND INSTRUCTION MANUAL



For Kratos Reach-In Models: 67K-001, 67K-002, 67K-003, 67K-004, 67K-005, 67K-006, 67K-007, 67k-008, 67K-009, 67K-010, 67K-011, 67K-012, 67K-013

TABLE of CONTENTS

INTRODUCTION....2
SERIAL NUMBER INFORMATION....3
RECEIVING AND INSPECTING THE EQUIPMENT....4
APPLIANCE SAFETY....4
IMPORTANT SAFEGUARD....5-6
Electrical Connection....7
Refrigerant Disposal....7
Appliance Disposal....7
APPLIANCE INSTALLATION....8
Remove Packaging Materials....8
Location Requirements....8
Inside cabinet:....8
Outside cabinet:....8
Installation Clearance....9
Leveling....9
Stabilizing....9
Field Reversing Door....9
Electrical Connection....10

OPERATION....11
Refrigerated cycle....11
Power Switch:....11
SOLID-STATE THERMOSTAT DESCRIPTIONS....11
1. FRONT PANEL COMMANDS....11
2. MAIN FUNCTIONS....12
3. ALARM SIGNALLING....12
TIPS FOR PROPER OPERATION, CLEANING AND MAINTENANCE....12
CLEANING AND MAINTENANCE....13
Exterior and Interior Cleaning of Appliances....14
Cleaning the Condenser Coil....14
Stainless Steel Care and Cleaning....15
Gasket Maintenance....15
Doors/Hinges....15
Drain Maintenance....15
TROUBLESHOOTING GUIDE....16
TROUBLESHOOTING CHART....16
SERVICE AND TROUBLESHOOTING TIPS....17
WARRANTY....18

INTRODUCTION

This user's manual is intended for installing, using and servicing your Kratos appliance. It is recommended that this manual be kept in an accessible place. Every Kratos machine is designed and manufactured according to the highest standards of safety and performance. It meets or exceeds UL 471 safety standards and sanitation standard NSF 7.

Kratos assumes no liability or responsibility of any kind for products manufactured by Kratos that have been altered in any way, including the use of any parts and/or other components not specifically approved by Kratos.
Kratos reserves the right to make design changes and/or improvements at any time. Specifications and designs are subject to change without notice.

SERIAL NUMBER INFORMATION

- The serial number of all self-contained appliances is located inside the unit on the left hand side near the top on the interior wall.
- Always have the serial number of your unit available when calling for parts or service.

READ THIS MANUAL IN ITS ENTIRETY
TO HELP FAMILIARIZE YOURSELF WITH YOUR NEW EQUIPMENT BEFORE PROCEEDING.
We have provided many important safety messages in this manual.
Always read and obey all safety messages.
Understanding of safety messages will assist in alerting you to potential hazards, as well as tell you how to reduce the chance of injury. Follow the instructions as outlined in this manual.

Due to periodic changes in designs, methods, procedures, policies and regulations, the contents of this manual are subject to change without notice. While we exercise good faith efforts to provide information that is accurate, we are not responsible for errors or omissions in information provided or conclusions reached as a result of using this reference manual. By using the information provided rather than simply using it for reference purposes, the user assumes all risks in connection with such use.

RECEIVING AND INSPECTING THE EQUIPMENT

Even though most equipment is shipped crated, care should be taken during unloading so the equipment is not damaged while being moved into the building.

1. Visually inspect the exterior of the package and skid or container. Any damage should be noted and reported to the delivering carrier immediately.
2. If the damage appears minor, open and inspect the contents with the carrier. Take photographs of the packaging before its opened. If the carrier is impatient & won't wait, return the goods if the damage appears to be anything more substantial than superficial harming of the external protective packing layers.
3. In the event that the exterior is not damaged, yet upon opening, there is concealed damage to the equipment, notify the carrier. Notification should be made verbally as well as in written form.
4. Request an inspection by the shipping company of the damaged equipment. This should be done within 10 days from receipt of the equipment.
5. Be certain to check the compressor compartment housing and visually inspect the refrigeration package. Be sure lines are secure and base is still intact.
6. Freight carriers can supply the necessary damage forms upon request.
7. Retain all crating material until an inspection has been made or waived.

APPLIANCE SAFETY

Always read and obey all safety messages.



This is the Safety Alert Symbol. This symbol alerts you to potential hazards that can injure or kill you and others. All safety messages will follow the Safety Alert Symbol and either the words **"DANGER", "WARNING" OR "CAUTION".**

DANGER

DANGER means that failure to heed this safety statement may result in Death or Severe Personnel Injury.

WARNING

WARNING means that failure to heed this safety statement may result in extensive product damage, serious personal injury, or death.

CAUTION

CAUTION means that failure to heed this safety statement may result in minor or moderate personal injury, or property or equipment damage.

All safety messages will alert you to what the potential hazard is, tell you how to reduce the chance of injury, and let you know what can happen if the instructions are not followed.



NOTE: IMPORTANT SAFETY INSTRUCTIONS

WARNING

To reduce the risk of fire, electric shock or injury, when using your appliance, follow these basic precautions:

- Plug into grounded 3-prong outlet.
- Do not remove grounding prong.
- Do not use an adapter.
- Do not use an extension cord.
- Disconnect power before cleaning.
- Disconnect power before servicing.
- Use 2 or more people to move and install appliance.

SAVE THESE INSTRUCTIONS

IMPORTANT SAFEGUARDS



Before the appliance is used, it must be properly positioned and installed as described in this manual, so read the manual carefully. We strongly recommend that you have a professional install your new machine. The warranty may be affected or voided by an incorrect installation. To reduce the risk of fire, electrical shock or injury when using the appliance, follow basic precautions, including the following:

DANGER

- It is recommended that a separate circuit, serving only your appliance, be provided. Use receptacles that cannot be turned off by a switch or pull chain.
- Please ensure that the required voltage is being supplied at all times.
- The unit should be plugged into a grounded and properly-sized electrical outlet with appropriate over-current protection.
- Ensure the unit is not resting on or against the electrical cord.
- Do not connect or disconnect the electric plug when your hands are wet.
- Never unplug the appliance by pulling on the power cord. Always grip the plug firmly and pull straight out from the outlet.
- Never clean appliance parts with flammable fluids. Do not store or use gasoline or other flammable vapors and liquids in the vicinity of this or any other appliance. The fumes can create a fire hazard or explosion.
- Before proceeding with cleaning and maintenance operations, make sure the power line of the unit is disconnected.
- Unplug the appliance or disconnect power before cleaning or servicing. Failure to do so can result in electrical shock or death.
- If the unit is not in use for a long period of time, it is best to unplug the unit from the outlet.
- After unplugging or if a power outage occurs to the unit, wait at least 10 minutes before plugging it back in. Failure to do so could cause damage to the compressor.
- Do not operate the appliance with a frayed or crimped power cord.
- Do not attempt to repair or replace any part of your appliance unless it is specifically recommended in this manual. A qualified technician should do all other servicing or repairs.
- Flammable refrigerant used in this units with the risk of fire or explosion. Do not use mechanical devices to defrost the unit. Do not puncture refrigerant tubing.
- Risk of fire or explosion. Flammable refrigerant used. To be repaired **ONLY by trained service personnel**. Do not puncture refrigerant tubing.

WARNING

- Use two or more people to move and install appliance. Failure to do so can result in serious injury.
- This appliance must be properly installed and located in accordance with the Installation Instructions before it is used.
- Do not touch the cold surfaces in the appliance compartment when hands are damp or wet. Skin may stick to these extremely cold surfaces.
- Setting temperature controls to the ZERO (0) position does not disconnect power from the appliance, it must be turned off at the unit appliance circuit breaker or by unplugging it.
- To ensure proper ventilation for your appliance, choose a well-ventilated area with temperatures above 50ºF (10ºC) and below 86ºF (30ºC). If in an environment with a temperature between 86 and 104ºF (30 to 40ºC) use of a fan blowing into the utility compartment or similar auxiliary cooling of that area is required. This unit MUST be installed in an area protected from the elements, such as wind, rain, water spray or drips.
- The appliance should not be located next to fryers, ovens, grills or other sources of high heat.
- It is important for the appliance to be level for proper operation. You may need to make adjustments to the unit to level it.

- Remove the packing materials & be sure to discard them as the work area is policed. Clean the appliance before using.
- Do not use this apparatus for other than its intended purpose.
- Only trained, qualified personnel should attend to and monitor the appliance's performance/preventative maintenance.
- Never use the shelving as a stepping stool or ladder.
- Please refer to the Trouble Shooting references when the unit is having problems. Do not attempt to solve the problem on your own. Please refer to a certified technician only.
- Risk of fire or explosion. Flammable refrigerant used. Consult repair manual/owner's guide before attempting to service this product. All safety precautions must be followed.
- Risk of fire or explosion. Dispose of properly in accordance with federal or local regulations. Flammable refrigerant used within the unit.
- Risk of fire or explosion due to puncture of refrigerant tubing; follow handling instructions carefully. Flammable refrigerant used.
- Servicing shall be done by supplier authorized service personnel to minimize the risk of possible ignition due to incorrect parts or improper service.

IMPORTANT SAFEGUARDS (cont.)

Electrical Connection

Do not, under any circumstances, cut or remove the third (ground) prong from the power cord. For personal safety, this appliance must be properly grounded. The power cord of this appliance is equipped with a 3-prong grounding plug that mates with a standard 3-prong grounding wall outlet to minimize the possibility of electric shock hazard from the appliance. Have the wall outlet and circuit checked by a qualified electrician to make sure the outlet is properly grounded. The appliance should always be plugged into its own individual electrical outlet which has a voltage rating that matches the rating label on the appliance. This provides the best performance while also preventing the overloading wiring circuits which could cause a fire hazard from overheated wires. Repair or replace immediately all power cords that have become frayed or otherwise damaged. Do not use a cord that has been crimped, shows cracks, or has frayed insulation, abrasions, or damage along its length or at either end. When moving the appliance, be careful not to damage the power cord.

Power Surges

Connecting the unit to the incorrect voltage or oversized circuit protection (i.e., a breaker rated for over 20 amps) is not covered by the appliance warranty. Neither is a damaged power cord, using unauthorized electrical components and/or modifying the units wiring.

Disposal

- **Refrigerant**
  - If you are disposing of your old appliance, it has flammable refrigerant. Make sure the refrigerant is removed for proper disposal by a qualified service technician.
- **Appliance**
  - Follow and comply with all applicable codes and ordinances, cut the plug off the electrical power cord, remove the door(s), and discard the shelving. This prevents misuse of the unit after it has been scrapped.
  - The appliance uses flammable insulation blowing gas C5H10, disposal of the appliance shall be in accordance with the regulations of local authorities.

APPLIANCE INSTALLATION

WARNING

Excessive Weight Hazard

Use two or more people to move and install appliances.

Failure to do so may result in serious injury.

Remove Packaging Materials

IMPORTANT:

Do not remove any permanent instruction labels or the data label on your appliance.

- Remove tape and glue from your appliance before using.
- To remove any remaining tape or glue, rub the area briskly with your thumb or a sponge. Tape or glue residue can also be easily removed by rubbing a small amount of liquid dish soap over the adhesive with your fingers. Wipe with warm water and dry with a soft cloth.
- Do not use sharp instruments, rubbing alcohol, flammable fluids, or abrasive cleaners to remove tape or glue. These products can damage the surface of your appliance.

NOTICE:

LOSS OR SPOILAGE OF PRODUCTS IN YOUR APPLIANCE IS NOT COVERED BY WARRANTY. IN ADDITION TO FOLLOWING THE RECOMMENDED INSTALLATION PROCEDURES AFTER IT HAS BEEN SET IN PLACE, DO NOT RUN THE APPLIANCE FOR 24 HOURS TO LET OIL IN THE REFRIGERANT LINE TO RE-EQUILIBRATE. (DO NOT LOAD WITH PRODUCT UNTIL THE UNIT TEMPERATURE HAS REACHED ITS SET POINT.)

Location Requirements

- Appliances represented in this manual are intended for indoor use only.
- Be sure the location chosen has a floor strong enough to support the total weight of the cabinet and contents as a fully loaded unit can weigh as much as 1500 pounds.
- Reinforce the floor as necessary to provide for maximum loading.
- For the most efficient refrigeration, be sure to provide good air circulation inside and out.

Inside cabinet:

Do not pack the units so full that air cannot circulate. The refrigerated air is discharged at the top rear of the unit. It is important to allow for proper air flow from the top rear to the bottom of the unit. Obstructions to this air flow can cause the evaporator coil to freeze up and loss of temperature or overflow of water from the evaporator drain pan. The shelves have a rear turn up on them to prevent this. However, bags and other items can still be located at the far rear of the cabinet. Air is brought into the evaporator coil with fans mounted to the front of the coil.

Outside cabinet:

Be sure that the unit has access to ample air. Avoid hot corners and locations near stoves and ovens.

It is recommended that the unit be installed no closer than 6" (150mm) from any wall, a max door swing clearance of 60.5 in. (1537mm) and with at least a 12" (305mm) of clear space above the unit. Adequate air flow (≤86º F) into the utility compartment is needed to deliver proper performance and extend the appliance life.

APPLIANCE INSTALLATION (cont.)

Installation Clearance

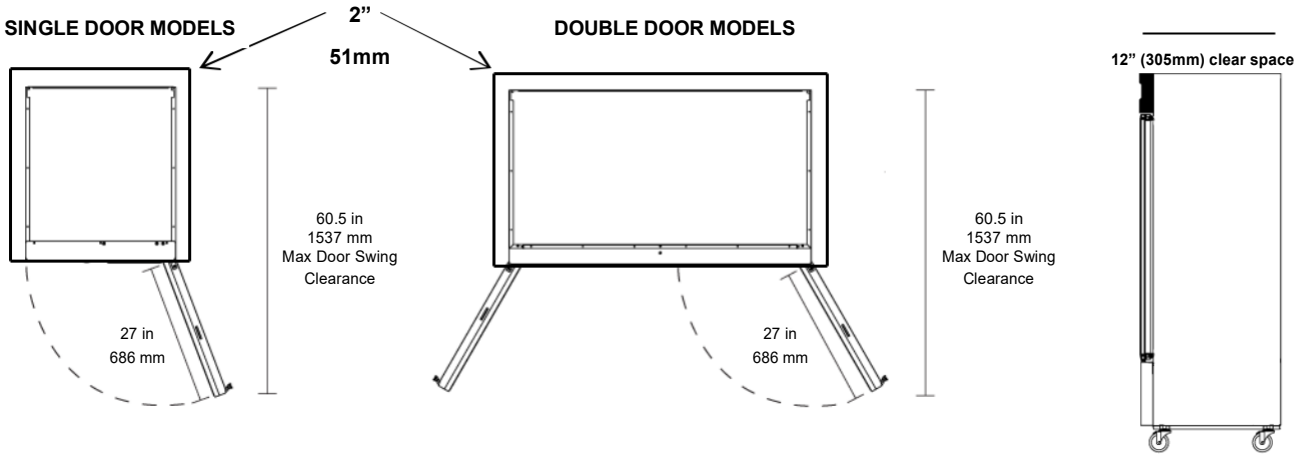

Leveling

Ensure the floor where the unit is to be located is level. (It is ok to slope down from front to rear by up to 1/4" – it must not slope from the rear to the front.)

Stabilizing

All models are supplied with casters for your convenience. It is especially important, however, that the cabinet be installed in a stable condition with the front wheels locked while in use. Should it become necessary to lay the unit on its side or back for any reason, allow at least 24 hours before start-up to allow compressor oil to flow back into place. Failure to meet this requirement can cause compressor failure and unit damage which is not covered by the appliance warranty.

Reversing The Door (Single Door Models Only)

Tools Needed: • Socket Set • Pliers • Adjustable Wrench • Phillips Head Screwdriver

Single door models can be converted from right-hand hinged to left-hand hinged and vice-versa by removing the door hinges from both the door and unit, reversing their locations, and reattaching them, and re-hanging the door upside-down.

A. Remove the bottom vent by loosening the 4 screws that hold it in place. You do not need to fully remove the screws, as the vent will slide up and out.
B. Remove the top panel by unscrewing the 2 small screws. Once the screws are removed, the top panel will hinge up.
C. Remove the small screws at the top and bottom door hinge where it attaches to the brackets. Note: DO NOT lose the small washers.
D. Take off the top bracket by removing the 3 bolts.
E. The door should come off at this point.
F. Remove the 3 bolts holding the bottom bracket.
G. Replace the bottom hinge with the new left hand bottom bracket using 3 bolts.
H. Put the door on the bottom hinge on the left side.
I. Place the top bracket on the top of the door, securing with 3 bolts.

J. Replace the small screws on the top and bottom of the bracket and door spring. Make sure the door is on properly before you do this.
K. You will need to adjust the top and bottom spring tensioners so the door will close properly.
L. Reattach the bottom vent and top panel.

NOTICE:

Unit repairs will not be subject to standard warranties if due to improper installation, procedures, or utilizing an unqualified installer technician to commission the unit.

Electrical Connection

Refer to the amperage data on the Technical Information table, the serial tag, your local code, or the National Electrical Code to be sure that unit is connected to the proper power source.



DANGER

The unit must be turned OFF and disconnected from the power source whenever performing service, maintenance functions or cleaning the refrigerated area. Failure to comply may result in Death or Severe Personnel Injury.

OPERATION

Refrigerated cycle

Refrigerators: During the refrigeration cycle, the evaporator fans will run continuously even when one or more doors are open. The door switch will activate the lights when opened.

- Every 6 hours, the unit will turn off and on to allow the evaporator coil to defrost. The controller now displays defrost symbol. When the coil temperature reaches 41°F or after 20 minutes of defrost, the unit will turn on again.
- Anti-condensation heaters on door frames work in conjunction with the compressor.
- The factory setting for the temperature range is 33° to 41° F.

Freezers: During the refrigeration cycle, the controller supplies power to the condensing unit and evaporator fan motors. The evaporator fans will run at any time when the evaporator coil temperature is below 54° F. They will also keep running when door is open but cycle off during a defrost period. The door switch will activate the lights when opened.

- Every 6 hours, the unit will turn off and electric heater will turn on to defrost. The controller now displays the defrost symbol. When the coil temperature reaches 45°F or after 20 minutes of defrost, the unit will turn on again.
- Anti-condensation heaters on door frames work in conjunction with the compressor.
- The factory setting for temperature range is -7 to 0°F

SOLID-STATE THERMOSTAT OPERATIONS



LEGGI E CONSERVA QUESTE ISTRUZIONI

READ AND SAVE THESE INSTRUCTIONS

Table of alarms

Alarm code		LED	Description	Parameters involved
E0	E0	ON	probe 1 error = control	-
E1(*)	E1	ON	probe 2 error = defrost	[d0 = 0 / 1]
dr(*)	dr	ON	open door alarm	
Lo	Lo	ON	low temperature alarm	[AL] [Ad][A0]
HI	HI	ON	high temperature alarm	[AH] [Ad][A0]
EE	EE	ON	unit parameter error	-
EF	EF	ON	operating parameter error	-

(*) not available for PJEZS*E*

Setting the set point (desired temperature)

- press SET for 1 s, the set value will start flashing after a few moments;
- increase or decrease the value using ▲ or ▼ ;
- press SET to confirm the new value.

Switching the device ON/OFF

press ▲ for more than 3 s. The control and defrost algorithms are now disabled and the instrument displays the message"OFF" alternating with the temperature read by the set probe.

Manual defrost (only for models C/Y)

press down ▼ for DOWN more than 3 s (the defrost starts only the temperature conditions are valid).

Always remember to calculate the differential if you change the minimum temperature setting. The cabinet temperature will fluctuate up to +7°F over your set minimum temperature as the compressor runs and shuts off. Setting the temperature too high will result in unsafe maximum temperatures and possible health code violations.

Display and functions

During normal operation, the controller displays the ambient temperature. In addition, the display has LEDs that indicate the activation of the control functions (see Table 1), while the 3 buttons can be used to activate/deactivate some of the functions (see Table 2).

LEDs and associated functions

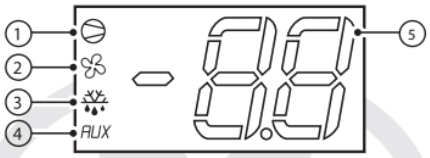

index	function	normal operation			Start up
		ON	OFF	blink	
1	compressor	on	off	request	on
2	fan	on	off	request	on
3	defrost	on	off	request	on
4	aux	output on	output off	-	on
5	digit	2 digit LED display with sign (-99 to 99) and decimal point			

Table.1

Table of functions activated by the buttons



button	normal operation		start up	
	pressing the button alone	pressed together		
	more than 3 s: toggle ON/OFF	pressed together display defrost probe temp.	-	
	more than 3 s: start/stop defrost		Pressed together start parameter reset procedure	For 1 s: display firmware vers. code
	1 s: display/set the set point More than 3 s: access parameter setting menu(enter password '22')	-		

Table.2

TIPS FOR PROPER OPERATION, CLEANING AND MAINTENANCE

1. The unit should be cleaned daily as well as being tested for the proper holding temperature by measuring the content temperature and comparing it to the temperature displayed on the controller. They should be within 3°F of each other.
2. When cleaning the exterior surface always use a soft cloth or microfiber towel. If a stiff bristle brush, scouring pad or scraper is used, the protective chromium oxide barrier will be penetrated allowing the appliance to show signs of rust.
3. When cleaning the interior or exterior of the appliance always use a mild detergent solution or warm soapy water. This won't harm the plastic or metallic substances and will remove most residual surface dust and grime. If a more aggressive cleaning is needed use a General Purpose Synthetic Fiber Green Scouring Pad and a solution of dish detergent and warm water or a stainless steel cleaner/polishing product.
4. Ensure your gaskets are making a good compression seal and aren't torn or damaged as air entering the unit can increase the appliance's refrigeration system energy usage. In extreme cases, the temperature could fall out of range. When changing a gasket, it is recommended that a dab of gasket adhesive be applied every 10 to 12 inches to help hold the gasket in position. This escaping air may cause surface condensation.
5. Do not pack the unit so full that air cannot circulate. The refrigerated air is discharged at the bottom rear of the unit. It is important to allow for proper air flow from the top rear to the bottom of the unit.

6. Minimize the number of times the appliance door needs to be opened, as frequent access may preclude the unit's ability to maintain the proper temperature.
7. Use shelving with rear and side turn up rails to ensure proper air circulation is maintained as this is needed for effective, efficient temperature regulation.
8. Never use an infrared thermometer to monitor the unit's contents bulk temperature as they aren't accurate for this application. Use a NIST capable instrument with the right prove and calibrate the thermometer at least 3 times a year using an ice bath. Digital pocket thermometers may be off by as much as 1.8°F when measuring refrigerated products.
9. For best performance, the ambient conditions should be less than 80°F with a relative humidity below 65%.
10. Ensure the automatic defrost cycle is set to keep the evaporator fan coil free of ice with proper air flow or the unit won't maintain the right temperature. The set point for an appliance should be between -13° and 14°F to preserve the shelf life and freshness of your stored products without needing to worry about a frozen evaporator.
11. Periodically inspect the displayed appliance temperature and measured steady state product temperature with a calibrated high-quality digital thermometer. The two readings should agree within 4º F and be below the recommended product holding temperature established by your operating procedures as well as the model food code.
12. The cooling fins are subject to clogging with grease, dust, and other particulates even if an air filter is in place. The cooling fins should be cleaned using a commercial vacuum and if necessary, a degreaser at least 3 times a year. Do not use a wire or stiff bristle brush to avoid fin damage.
13. Any refrigeration system will generate condensate by cooling the air as it circulates through the appliance. At least twice a year, the drain line or condensate evaporator, tested to ensure the generated condensate is being adequality dealt with, and thoroughly cleaned/descaled so the condensate is always properly evacuated from the appliance.
14. The refrigeration system comes with a controller or thermostat to regulate the cold compartment temperature. New digital controllers have a differential setting that establishes when the refrigeration system cuts in and out around the selected set point. A 3° or 4°F differential is recommended for most applications to deliver tight temperature regulation without short cycling the compressor.
15. Only load the unit with pre-cooled product at temperature, warm product can cause food safety issues and impact the cooling of the unit.
16. Grabbing and pulling the door to reopen it immediately after its closed (before the internal and external pressures are again equal) will damage the gasket. This will cause a need for faster replacement and impact performance if air is let in from damaged gasket.

CLEANING AND MAINTENANCE



DANGER

The unit must be turned off and disconnected from the power source whenever performing service, maintenance functions or cleaning the refrigerated area. Failure to comply may result in death or severe personnel injury.

NOTE

Ongoing appropriate preventative & repair maintenance along with cleaning the unit will preserve its performance, deliver high quality fresher product, and extend the appliance life.

Exterior and Interior Cleaning of Appliances

Clean using soap and warm water. If this isn't sufficient, try ammonia or a degreasing detergent and water or a nonabrasive multi-surface liquid cleaner. When cleaning the exterior, always rub with the "grain" of the stainless steel to avoid marring the finish.

- Do not use an abrasive cleaner because it will scratch the stainless steel and plastic and can damage the breaker strips and gaskets.

Cleaning the Condenser Coil

Regular cleaning is recommended every 90 days. In some instances, you may find that there is a large amount of debris and dust or grease accumulated prior to the 90 day time frame. In these cases the condenser coil should be cleaned every 30 days.

If the buildup on the coil consists of only light dust and debris, the condenser coil can be cleaned with a simple brush. Heavier dust build-up may require a vacuum or even compressed air to blow through the condenser coil.

If heavy grease is present, there are de-greasing agents available for refrigeration use and specifically for the condenser coils. The condenser coil may require cleaning with the de-greasing agent and then blown clear with compressed air or CO_2.

Failure to maintain a clean condenser coil can initially cause high temperatures and excessive run times. Continuous operation with dirty or clogged condenser coils can result in compressor failures. Neglecting the condenser coil cleaning procedures will void any warranties associated with the compressor or cost to replace the compressor.

- For efficient operation, keep the condenser surface free of dust, dirt, and lint.
- We recommend cleaning the condenser coil at least once per quarter more in a greasy/dust environment.
- Clean the condenser with a commercial condenser coil cleaner and a soft brush, available from any commercial refrigeration equipment retailer, or vacuuming the condenser with a shop vac or use CO_2.



CAUTION

Never use a high pressure water wash for this cleaning procedure as water can damage the electrical components located near or at the condenser coil.

To maintain proper refrigeration performance, the condenser fins must be clear of dust, dirt, and grease regularly. It is recommended that this be done at least every three to 4 months. If conditions are such that the condenser is totally or significantly blocked in three months, the frequency of cleaning should be increased. Clean the condenser with a vacuum cleaner or stiff brush. If extremely dirty, a commercial-grade condenser cleaner may be required.

CLEANING AND MAINTENANCE (cont.)

Stainless Steel Care and Cleaning

To prevent rust or discoloration on stainless steel several important steps need to be taken. First, one must understand the properties of stainless steel. Stainless steel contains 70-80% iron which will rust. It also contains 12-30% chromium which forms an invisible passive film over the steels surface which acts as a shield against corrosion. As long as the protective layer is intact, the metal is still stainless. If the film is broken or contaminated, outside elements can begin to breakdown the steel and begin to form rust or discoloration. At least every 6 weeks the stainless steel surfaces should be cleaned and treated with a cleaner/polish product. Use of “hard water” with minerals like iron in it must be dealt with immediately (wipe dry) or the surface may tend to rust.



CAUTION

Proper cleaning of stainless steel requires soft cloths or plastic scouring pads, never use steel pads, wire brushes or scrapers.

Cleaning solutions need to be alkaline based or non-chloride based. Any cleaner containing chlorides will damage the protective film of the stainless steel. If cleaners containing chlorides are used, be sure to rinse and dry thoroughly (similar to the use of hard water).
Routine cleaning of stainless steel can be done with soap and water. Extreme stains or grease should be cleaned with a non-abrasive cleaner and plastic scrub pad. It is always good to rub with the grain of the steel. There are also stainless steel cleaners available which can restore and preserve the finish of the steel’s protective layer.
Early signs of stainless steel breakdown can consist of small pits and cracks. If this has begun, clean thoroughly and start to apply stainless steel cleaners in attempt to restore the passivity of the steel.



CAUTION

Never use an acid based cleaning solution! Many food products have an acidic content which can deteriorate the finish. Be sure to clean the stainless steel surfaces of all food products.

Gasket Maintenance

Gaskets require regular cleaning to prevent mold and mildew build up as well as to keep the elasticity of the gasket. Gasket cleaning can be done with the use of warm soapy water. Avoid full strength cleaning products on gaskets. Do not use sharp tools or knives to scrape or clean the gasket.
Gaskets can easily be replaced and don’t require the use of tools or authorized service technicians. The gaskets are "Dart" style and can be pulled out of the grove in the door and replaced by pressing the new one back into place. Do not run the unit long after noticing the gasket is torn or not sealing – immediately schedule replacing it. Over time gaskets will wear, as such they and other wear parts are not covered by the appliance warranty.

Doors/Hinges

If the door is beginning to sag, tighten the screws that mount the hinge brackets to the frame of the unit. If the doors are loose or sagging, this can cause the hinge to pull out of the frame which may damage both doors and door hinges. (It may be necessary to insert some form of reinforcement if an old door & hinge set becomes loose so it can be tightened without stripping out of the body).

Drain Maintenance

Each unit has a drain located inside the unit which removes the condensation from the evaporator coil and evaporates it into an external condensate evaporator pan or feeds into a floor drain sump. The drain can become loose or disconnected. If you notice excessive water accumulation on the inside of the unit, be sure the drain tube is connected from the evaporator housing to the condensate evaporator drain pan.
If water starts to collect underneath the unit, check the condensate evaporator drain tube to be sure it is still located inside the drain pan. Also confirm the evaporator pan (where the condensate cannot feed into a floor drain) is keeping up with the discharge water, if not a larger electric condensate pan is needed. Excessive moisture or frequent accessing of the appliance content in a fairly humid ambient creates the need for a larger and more powerful condensate evaporator which isn’t covered by the appliance warranty.
If your floor is not level, this can also cause drain problems. Be sure all drain lines are free of obstructions because this may cause water to back up and overflow the drain pans.

TROUBLESHOOTING GUIDE

BEFORE CALLING FOR SERVICE

If the unit appears to be malfunctioning, read through the OPERATION section of this manual first. If the problem persists, see Troubleshooting chart below. The problem may be something very simple that can be solved without a service call. Always see if this chart describes the problem and offers a remedy to the problem.

Fault	Probable Cause	Action
The evaporator is iced over	**The unit is exposed to excessive moisture or the auto defrost cycle is set incorrectly**	Run the manual defrost cycle or unplug the unit and open the door
There is a loud noise	The floor is too weak or the unit is not level	Check the installation confirming the unit is level and adjust the tray position
	The back of the unit is too close to the wall	
	The tray is not in the correct position	
	The fan blade may be obstructed or unbalanced	Clear the fan blade obstruction or replace the fan
Compressor is Not Running	Fuse blown or circuit breaker tripped	Replace fuse or reset circuit breaker. If replacement of fuse or reset of circuit breaker doesn't correct the problem contact a qualified service technician.
	Power cord unplugged	Plug in power cord and check that the relevant breaker isn't tripped
	Thermostat set too high	Set thermostat to lower temperature
	A ground fault protector has tripped	Reset the circuit
Cabinet Temperature is too Warm	Thermostat set too high	Set thermostat to lower temperature
	Airflow is blocked	Re-arrange products to allow for proper air flow. Make sure there is at least four inches of clearance from the fan
	Low refrigerant levels	Contact a qualified service technician to check refrigerant levels
	Door is slightly ajar	Make sure door is completely closed.

TROUBLESHOOTING (cont.)

Fault	Probable Cause	Action
Water is pooling up on the floor near the appliance	The condensate pan isn't keeping up and is overflowing	Check the hot gas line temperature
		Add an additional powered condensate evaporator pan to accommodate the overflow
	If connected to a floor drain and it has become misaligned and/or the drain line may be clogged	Reposition the drain line so it flows into the floor drain
		Clear the drain line
Interior Light is Not Working	Poor switch connection	Turn off light switch and turn it back on.
	Bulb is not connected	Make sure the bulb is correctly inserted in the socket.
	Bulb has burned out	Replace the bulb. If replacement of bulb doesn't correct the problem contact a qualified service technician.
Condensation is collection on the cabinet and/or floor	Gasket is not sealing properly	Clean, repair, or replace the gasket as necessary
	High humidity / moisture in the air is causing dew drops	Wipe with a dry cloth
Gasket is tearing or being pulled out of its slot	Opening door immediately/too soon after it has been closed	Don't jerk on the door and allow enough time for the internal pressures to equalize.
The door does not close tightly	The door is bent	A replacement door may be necessary
	The door gasket has come out	Reposition or replace the gasket
	The unit is not level	Level the unit again
	Hinge has loosened	Tighten the door hinge and ensure it is secure

SERVICE AND TROUBLESHOOTING TIPS

1. The compressor comes with a 5 year limited warranty (2 year parts and labor and the subsequent 3 years part only). Properly assess the root cause of the problem, as issues that can cause similar symptoms such as weak refrigerant charge (leaks), condensing unit fan not performing properly, temperature controller failure, faulty starting or running components and filter drier needing replacement are not covered by the warranty. Service technician in years 2-5 must affirm the failure is the compressor and not the listed reasons.
2. The appliance is outfitted with Schrader access ports to make servicing easier enabling use of a pressure gauge connected to either the high or low side as well as facilitating applying a vacuum and recharging the refrigeration system.
3. A dirty or clogged condenser is not covered by the warranty.
4. After 30 days in service, gaskets and the door(s) sealing improperly are not covered by our warranty.
5. If the set point or auto defrost cycle program are misadjusted that condition is not covered by our warranty
6. A perimeter door heater can be replaced by removing the cover plate and replacing the heat cord element.

2 Year Limited Parts & labor Warranty

Kratos offers a warranty to the original purchaser of new equipment, that the model of equipment will be free of defects in material and workmanship for a period of 2 year from the original date of delivery. The Compressor is covered for the timeframe of 5 years. Equipment must be installed by a qualified installer where applicable. Warranty coverage is only valid in the Contiguous United States & Canada. It is for commercial customers and is not transferrable. Kratos will repair, provide replacement components, replace the entire unit, or refund the purchase price to satisfy the warranty obligation. Not to exceed the original price of the item purchased. Kratos makes no other warranties, express or implied, statutory, or otherwise, and hereby disclaims all implied warranties, including the implied warranties of merchantability and of fitness for a particular purpose.

The 2 Year warranty does not cover:

- Failure to install and/or use equipment within proper operating conditions as specified by Kratos. Improper operating conditions include but is not limited to Residential, outdoor, or mobile applications.
- **For commercial use only, residential use voids warranty.**
- **Mobile applications fall under a different level of coverage as outlined below.**
- **Outdoor use will void the warranty.**
- Issues related to improper installation which are the responsibility of the installer. To include improper voltage, phase, or fuel type.
- Damage caused by power surges, brownouts, or inconsistent voltage such as when connected to a generator. Also to include damage caused by vandalism; improper handling, maintenance, or storage; use of unauthorized parts, impacts by foreign objects, harmful chemicals, fire, flooding, or Acts of God.
- Failure to properly maintain equipment or failure due to lack of routine cleaning.
- Parts deemed by Kratos to be normal wear and tear parts including, but not limited to, casters, hoses, grates, glass, light bulbs, and rubber components.
- Products that have been modified, abused, or misused intentionally or accidentally. Any products that have been exposed to corrosive or other cleaners not intended for use on stainless steel will void the warranty.
- Any products sold outside the contiguous United States OR Canada.
- Any products where the original sale cannot be determined. No order #, invoice or receipt to provide proof of purchase will result in no warranty coverage.
- Service requires prior notice to Kratos and within 30 days of discovery of the defect, not to exceed the length of the warranty following the original date of delivery.
- Repair service must be through authorized Kratos services and not by unauthorized or unqualified persons. Repairs must be completed using parts consistent with Kratos OEM parts, except where permissible by state law.
- Rust or other damage caused by exposure to moisture.
- Freight damage must be made at time of delivery and addressed with the carrier for compensation.
- Kratos will not be liable for any parties that experience loss of product, consequential damage, lost business, or any other expenses.

The warranty does not cover overtime, holiday or weekend rates or other off-hour rates. Kratos reserves the right to deny coverage after a service technician is on site based on the above exclusions. Kratos will not be responsible for any service charges from non-warranty related labor and/or parts.

Food Truck/Mobile Application Warranty

Valid only in Contiguous United States

Kratos warrants all new equipment sold to food truck or other mobile applications for a period of **90 days** from the date of delivery and proper installation. Contact your authorized place of purchase for assistance.

For Warranty Inquiries or Service

Have your model number, serial number, and original order number ready to make an inquiry or claim. If possible, include pictures, a video and description of the problem to help expedite the processing time. Kratos reserves the right to investigate any warranty claim and evaluate the defective product to authenticate the problems found. Failure to permit this investigation and allow access to the defective item will void this warranty. Return authorization must be received from Kratos prior to returning any item. Any item that arrives without prior authorization will be refused and shipping costs will not be covered by Kratos.

- Call 1-800-215-9293
- Email crpcustomerservice@takktfoodservices.com