HUBERT
Ordering Information

HUBERT®

Worktables with Undershelf

INSTALLATION INSTRUCTIONS

CAUTION

INSPECT CONTENTS IMMEDIATELY AND FILE CLAIM WITH DELIVERING CARRIER FOR ANY DAMAGE.
SAVE YOUR BOX AND ALL PACKING MATERIALS.
YOU ARE RESPONSIBLE FOR DAMAGE TO YOUR UNIT IF RETURNED IMPROPERLY PACKED.

This package contains:
- (1) Tabletop
- (1) Undershelf
- (4/6) Legs
- (8/12) Set screws

Tool required:
- 5/32″ allen wrench

Step 1

Lay the tabletop flat on the box to protect the finish during assembly. See *Figure 1*.

NOTE: NSF installations require all set screws filled with an approved silicone sealer.

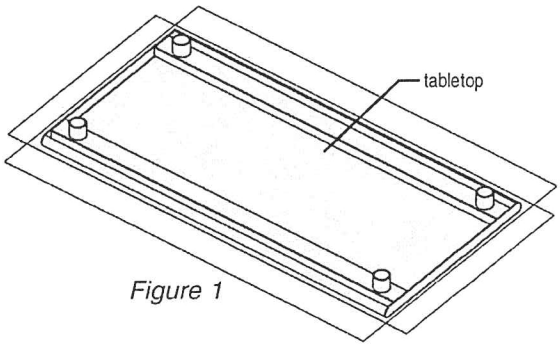

Figure 1

(continued on back page)

Hubert Co.
9555 Dry Fork Rd.
Harrison, OH 45030
PH# (800) 543-7374

HUBERT®

Worktables with Undershelf

INSTALLATION INSTRUCTIONS

Step 2

Insert set screws into undershelf leg collar. Position leg into leg collar to desired height and tighten set screw to secure legs.

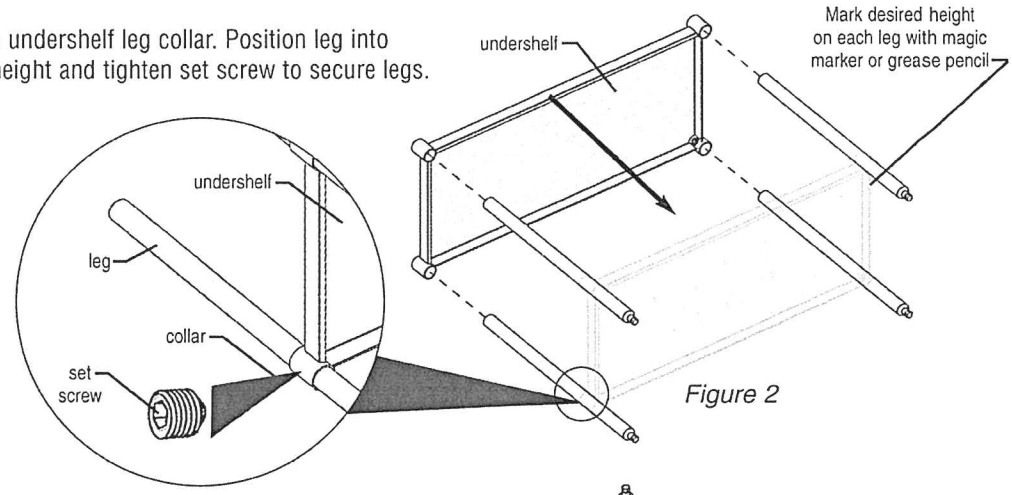

Figure 2

Step 3

Insert legs and undershelf assembly into gussets of the tabletop as indicated in *Figure 3*. Tighten set screws.

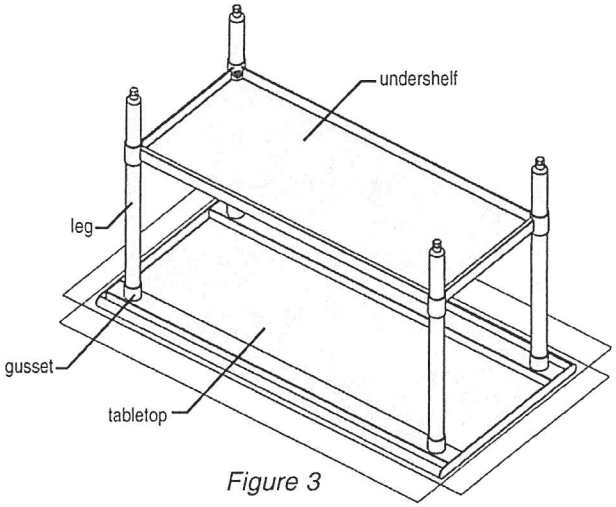

Figure 3

Step 4

Turn table upright and level by adjusting bullet feet.

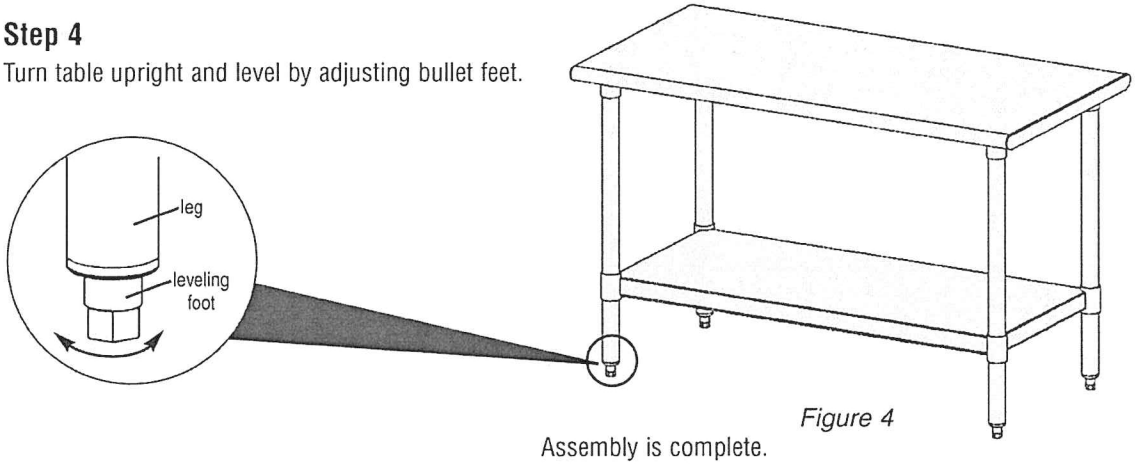

Figure 4

Assembly is complete.

(End)

Hubert Co.
9555 Dry Fork Rd.
Harrison, OH 45030
PH# (800)543-7374