1

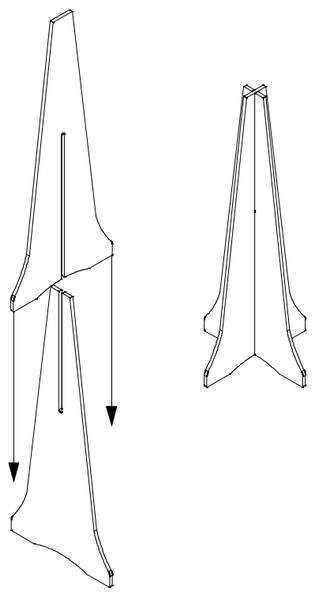

2

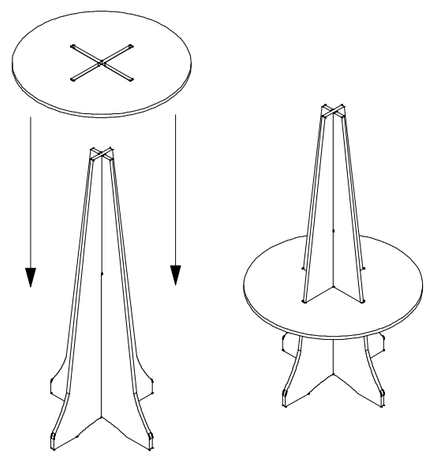

3

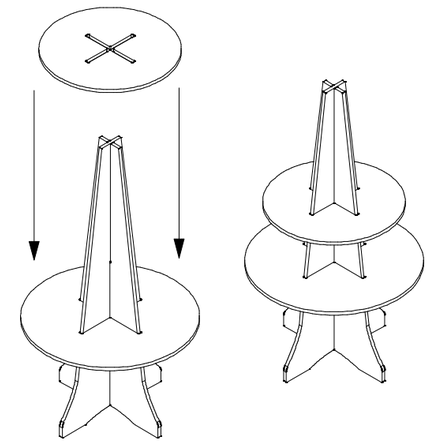

4

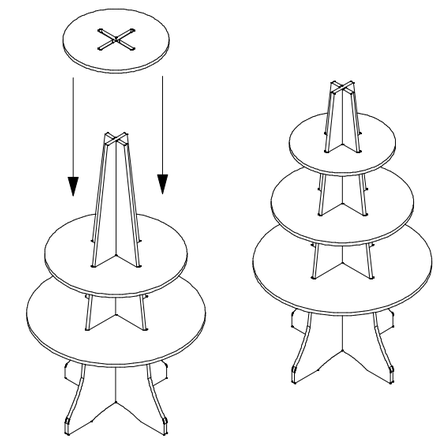

5

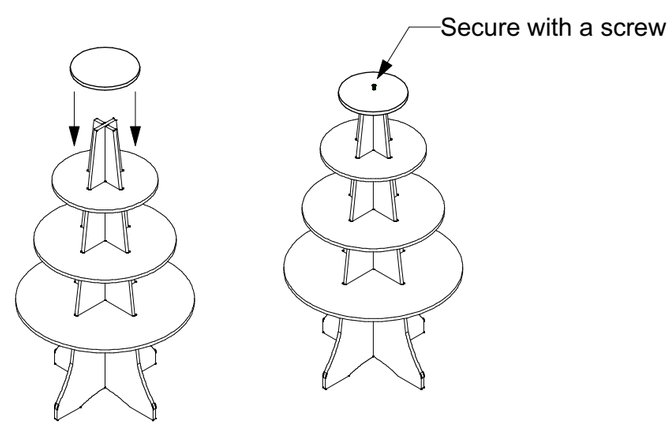

Abex Exhibit Systems • 355 Parkside Drive, San Fernando, CA 91340 • (800) 537-0231 • Fax (818) 503-9955

abex EXHIBIT SYSTEMS