BEVERAGE-AIR

Project: _____	AIA#
Item: _____	
Location: _____	SIS#
Approved: _____	

FOOD PREPARATION SERIES

DPD46HC Deli/Pizza Prep Table with Three Drawers
Hydrocarbon Series

MODEL:
DPD46HC-3



DPD46HC-3

3 Year Parts/Labor Warranty
Additional 2 Year Compressor Warranty

CABINET CONSTRUCTION

- Stainless steel front, sides, top, drawers and grille *(galvanized back & bottom)*
- Interior liner is made of corrosion resistant aluminum
- Aluminum top interior liner prevents spill from falling into cabinet
- Stainless steel top
- Removable hoods and insulated lid assemblies are made of matching stainless steel
- Magnetic gaskets provide positive seal on drawers
- 3” Casters, 2 with brakes standard
- 19” Wide reversible cutting board is removable for easy cleaning
- Units will accept pans up to 6” deep (pans are not included)
- Drawer frames are heavy-duty stainless steel
- 12-Gauge stainless steel drawer slides with Delrin® rollers rated at 275 lbs
- Telescoping slides, with locking mechanism to prevent drawers from being pulled off of cabinet
- Heavy-duty locking pan divider supports are standard for drawers
- Maintains product temperatures between 36º - 38ºF

OPTIONS & ACCESSORIES

- ☐ Stainless steel back and grille
- ☐ Stainless steel interior
- ☐ Clear Lid option
- ☐ Door models available
- ☐ Composite cutting board
- ☐ 6” Casters
- ☐ 6” Legs
- ☐ Remote option* (see note on back page)

REFRIGERATION SYSTEM

- Refrigeration system uses R290 refrigerant to comply with all environmental concerns
- Adaptive defrost
- Epoxy coated evaporator coil

DPD46HC Food Preparation Series: Deli/Pizza Prep Model

3779 Champion Blvd., Winston-Salem, NC 27105
1-888-845-9800 Fax: 1-336-245-6453
Beverage-Air.com Sales@bevair.com

BEVERAGE-AIR

Deli/Pizza Preparation Table

Model: DPD46HC-3

MODEL	DPD46HC-3
EXTERNAL DIMENSIONAL DATA	
Width Overall	46”
Depth Overall with Cutting Board	37”
Height Overall with 3” Casters with Lid Open	53 1/8”
Number of Drawers	3
Depth with Drawer Open 90 °	55 3/8”
Drawer Opening (in)	(3) 21 5/8” x 6 5/8”
Depth, Cutting Board	19”
INTERNAL DIMENSIONAL DATA	
NET Capacity (cubic ft.)	12.0
Internal Width Useable (in)	27”
Internal Depth Overall (in)	26”
Internal Height Overall (in)	23 7/8”
ELECTRICAL DATA	
Full Load Amperes 115/60/1	4.5
REFRIGERATION DATA	
Horsepower	1/2
Capacity (BTU/Hr)*	2940
WEIGHT DATA	
Gross Weight (Crated lbs)	311 lbs
Height - Crated	47 1/2”
Width - Crated	49”
Depth - Crated	37”

*NOTE: Remote units are field wired and comes with 6” legs. Refrigerant must be specified at time of order.

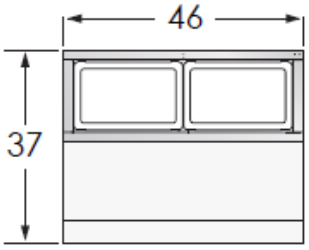

Model Views

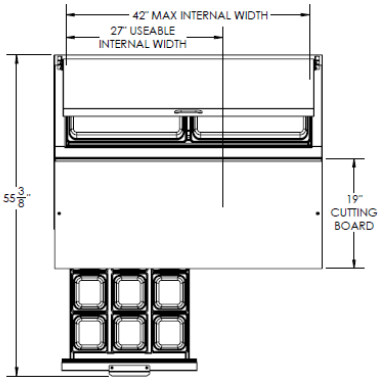

Plan View

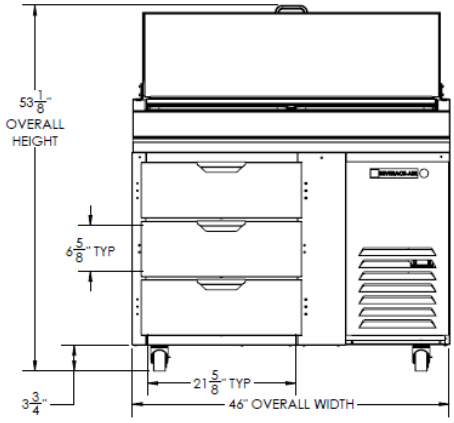

Elevation View

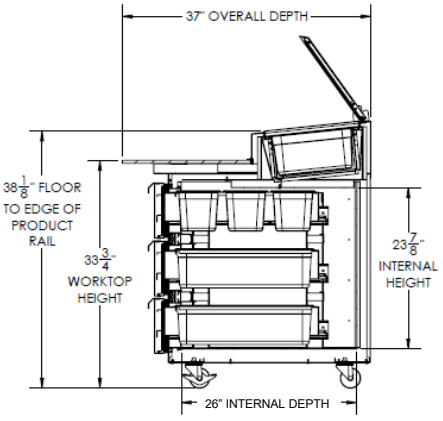

Side View

ELECTRICAL CONNECTION



115/60/1
NEMA-5-15P

Units pre-wired at factory and include 8’ long cord and plug set.

3779 Champion Blvd., Winston-Salem, NC 27105
1-888-845-9800 Fax: 1-336-245-6453
Beverage-Air.com Sales@bevair.com